Harrison Silverdale Ltd
Unit 1 Traso Business Park,
Callywhite Lane, Dronfield, Sheffield, S18 2XR

Tel: 01246 296 930 • Fax: 01246 296 940
Email: fasteners@harrisonsilverdale.co.uk
Internet: http://www.harrisonsilverdale.co.uk

Series: 10412 Type: - DIN 6923

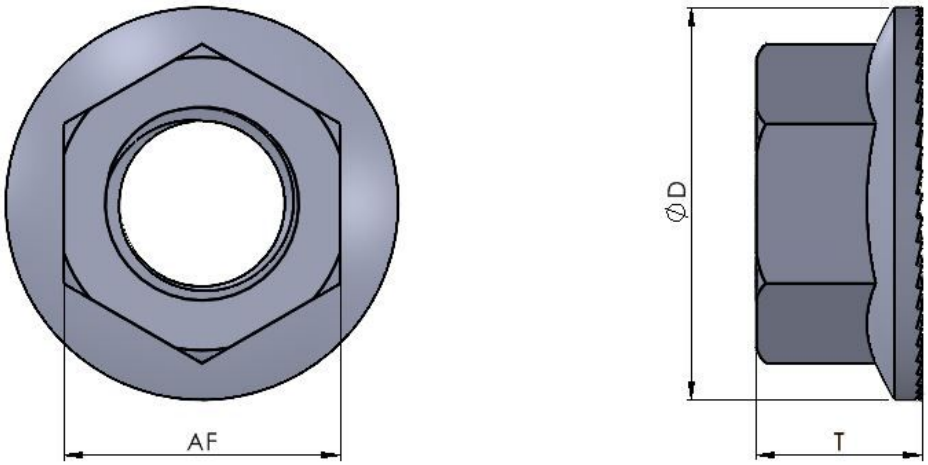

Hexagon Serrated Flange Nut

Part No.	Thread (D)	A/F	T	D
10412 M03	M3	5.5	3.7	8
10412 M04	M4	7	4.5	10
10412 M05	M5	8	4.6	11.8
10412 M06	M6	10	6	14.2
10412 M08	M8	13	8	17.9
10412 M10	M10	15	10	21.8
10412 M12	M12	18	12	26
10412 M14	M14	21	14	29.9
10412 M16	M16	24	16	34.5
10412 M20	M20	30	20	42.8

Material/Finish/Code:
Grade 8 Steel - Zinc Clear - 60Stainless Steel A2 - Self Colour - SSStainless Steel A4 -Self Colour - A4
Part Number ID:
Part No/Thread/FinishEg: 10412 M03 60: M3 Full Nut Zinc Clear

All information is given for guidance only and designers should satisfy themselves as to the suitability of the specification by requesting samples